MARK	DATE	UPDATE DESCRIPTION	SIGN	APPROVER
△				

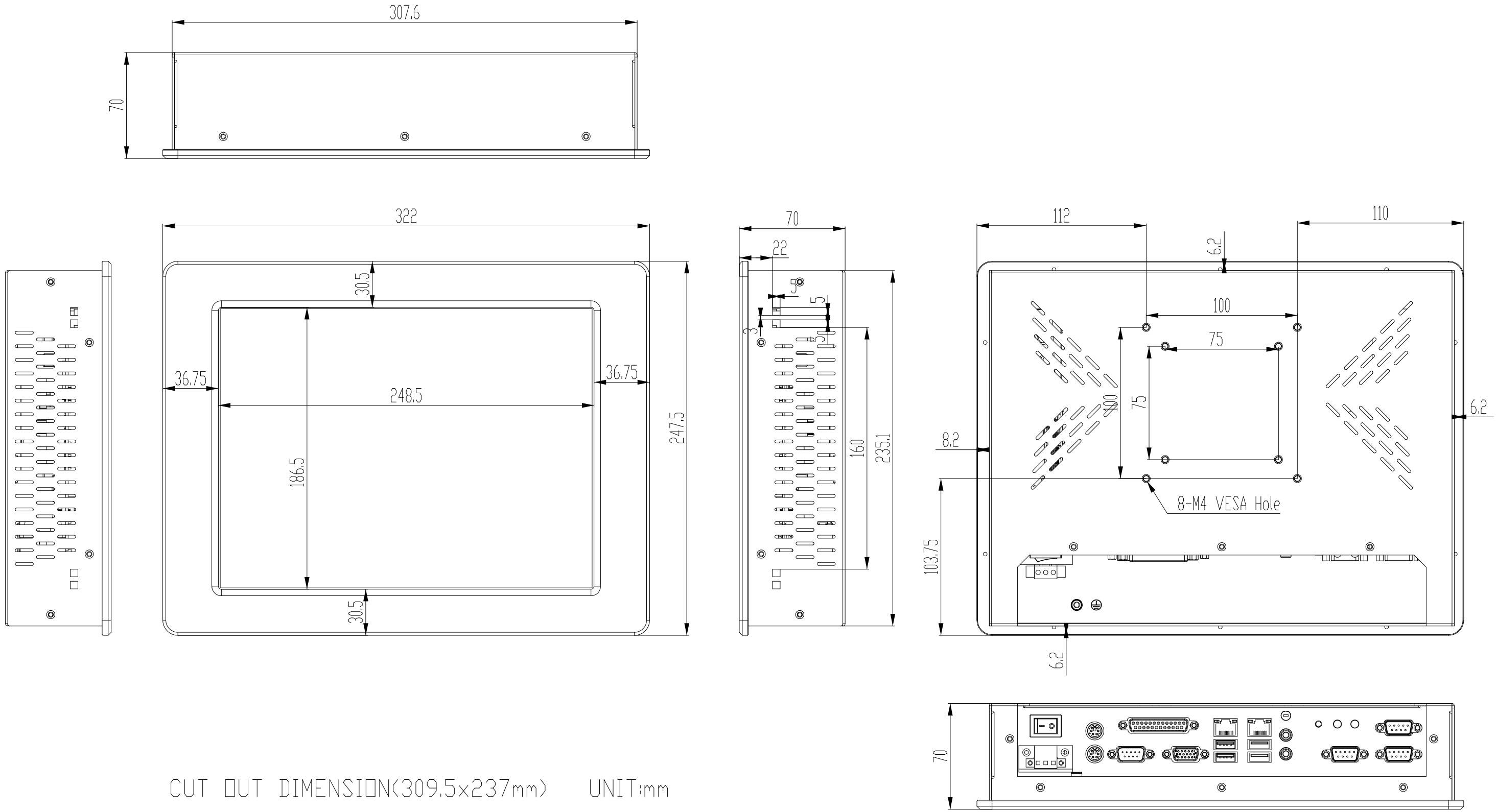

CUT OUT DIMENSION(309.5x237mm) UNIT:mm

* Note: this is a simplified drawing and some components are not marked in detail.
Please contact our sales representative if you need further product information.

www.anxinpc.com	FINISHING		PART NO.		Ver.	A0
	MATERIAL		MOLD NO.	IPC-12A	Q'ty	1
	APPROVED		TITLE	IPC-12A		
TOL: < 30 : ±0.1; 30 < 120 : ±0.15; 120 < 315 : ±0.2; 315 < : ±0.25; ANGLE TOL : ±0.5°	UNIT : mm	CHECKED				
	3RD ANGLE'S	DESIGNED	Martin	DRAWING NO.	IPC-12A-3D3V.DWG	△
		DATE	15-Nov-17	SIZE A3	SCALE 0.25	SHEET: 1 OF 1