MARK	DATE	UPDATE DESCRIPTION	SIGN	APPROVER
△				

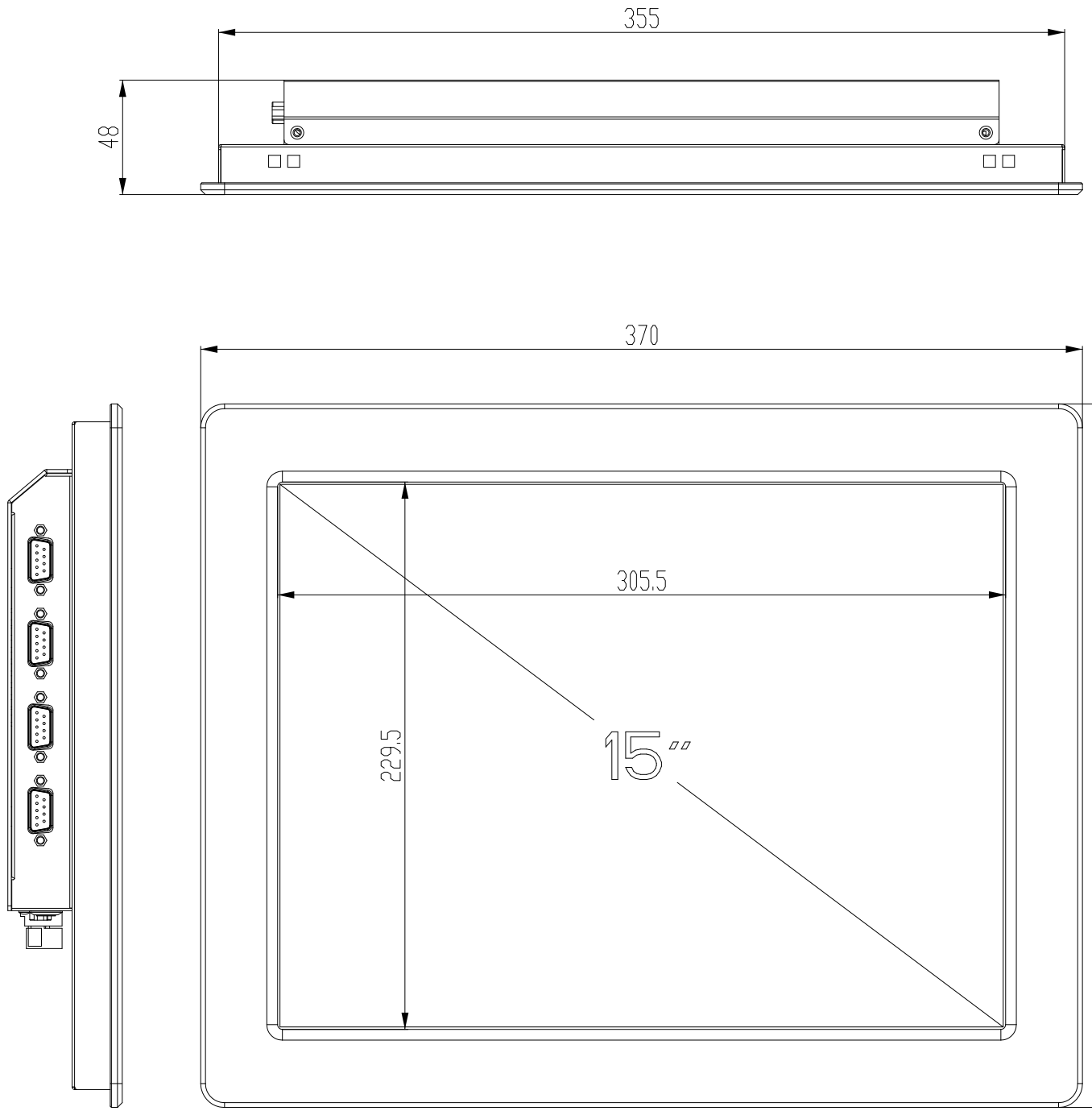

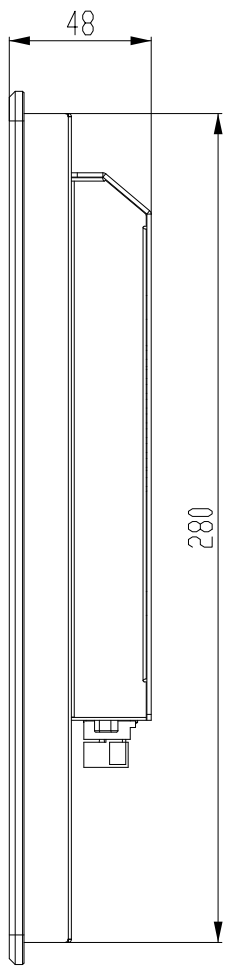

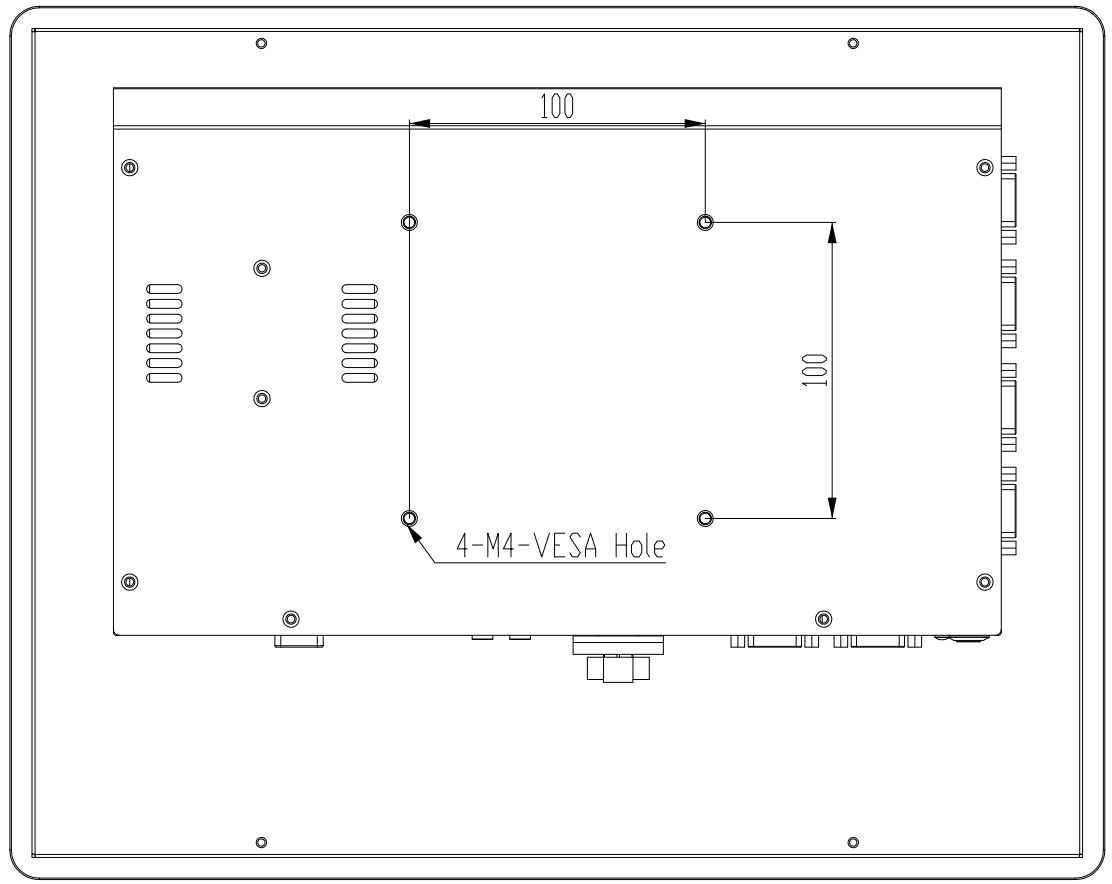

CUT OUT DIMENSION(357x282mm) UNIT:mm

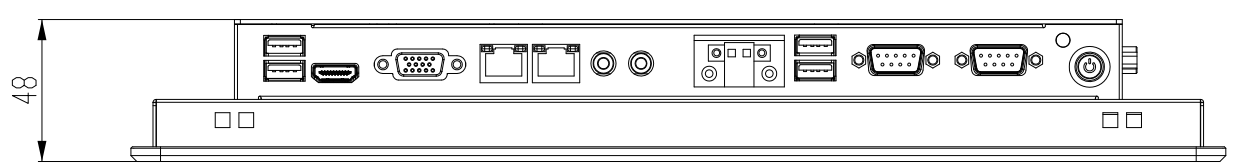

www.anxinpc.com

TOL			
	< 30	:	±0.1
	30 < 120	:	±0.15
	120 < 315	:	±0.2
	315 <	:	±0.25
	ANGLE TOL	:	±0.5°

UNIT : mm

3RD ANGLE'S

FINISHING		PART NO.		Ver.	A0
MATERIAL		MOLD NO.	IPC-15JN	Q'ty	1
APPROVED		TITLE	IPC-15JN-3D3V		
CHECKED					
DESIGNED	Martin	DRAWING NO.	IPC-15JN-3D3V.DWG		△
DATE	01-Mar-18	SIZE A3	SCALE 0.25	SHEET: 1 OF 1	