MARK	DATE	UPDATE DESCRIPTION	SIGN	APPROVER
△				

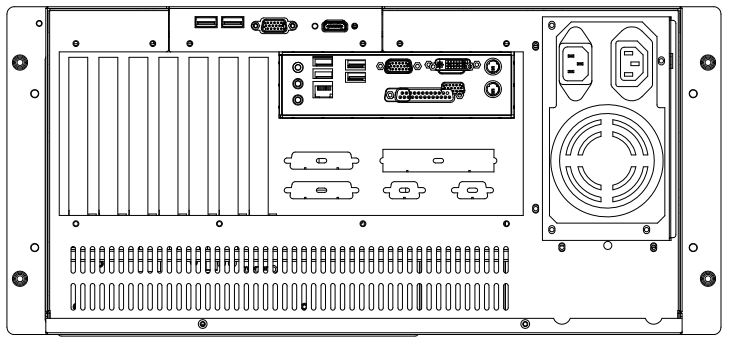

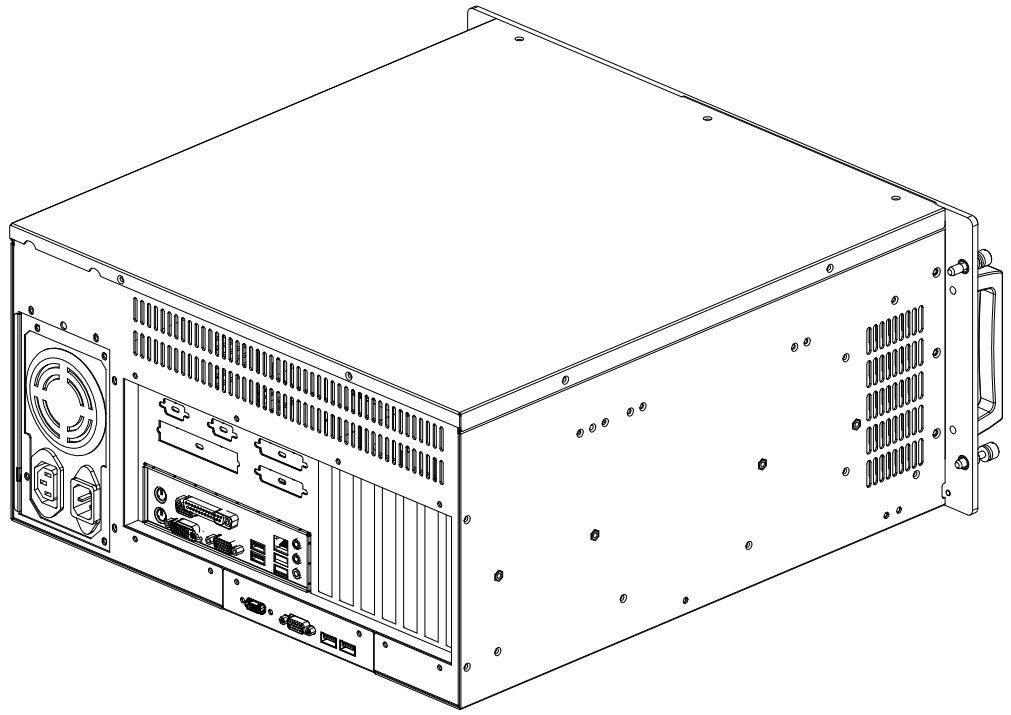

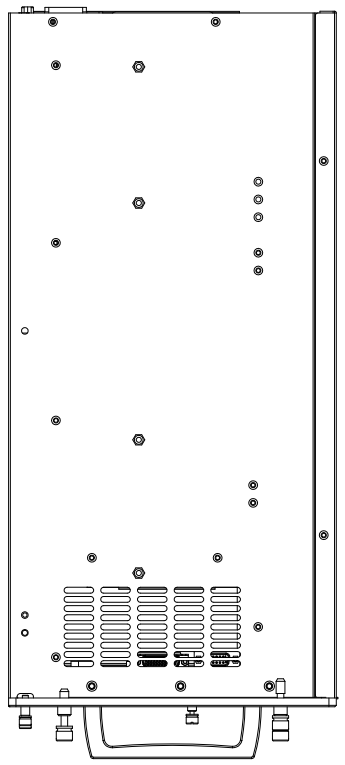

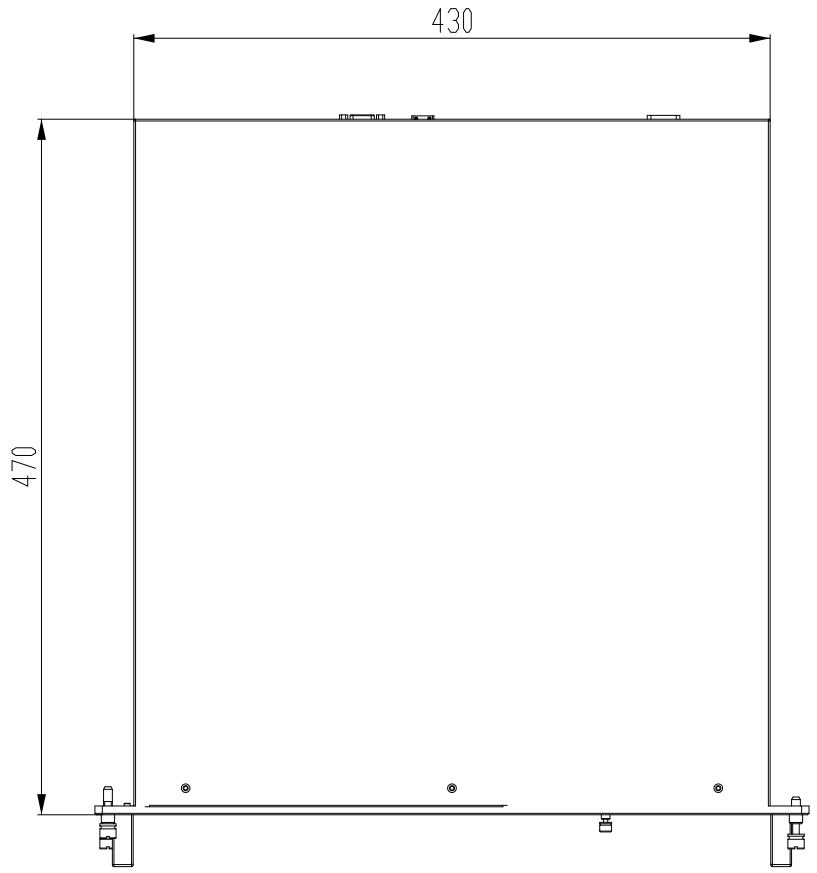

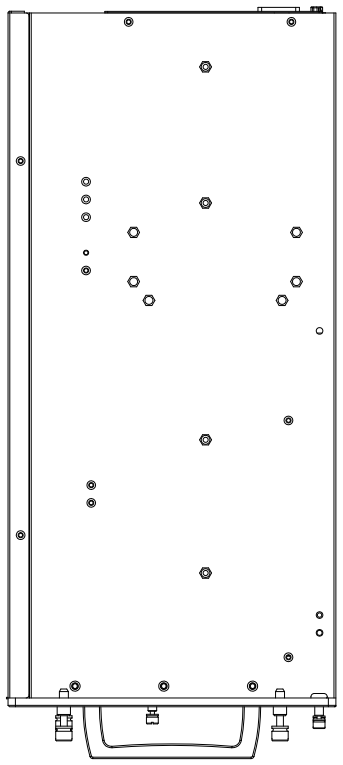

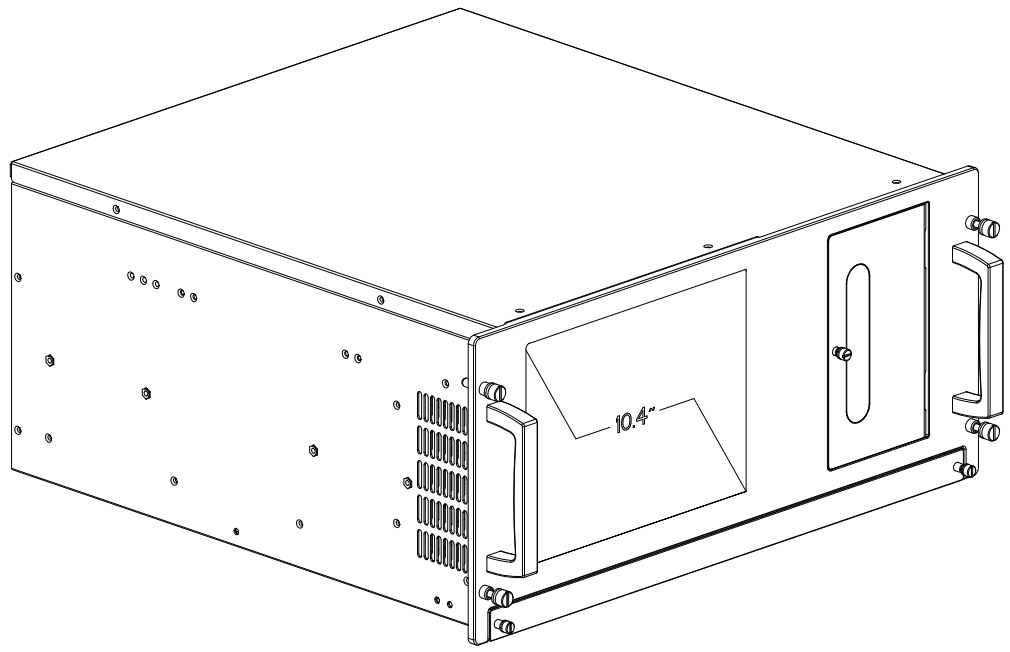

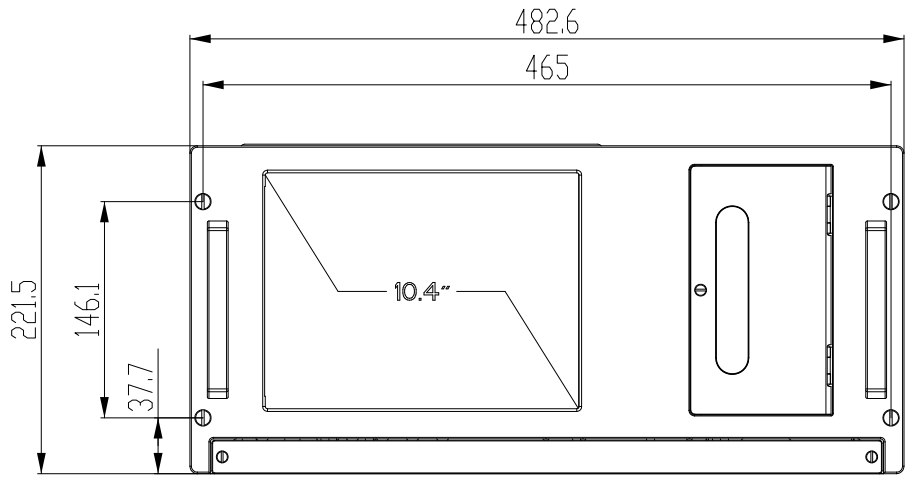

www.anxinpc.com				FINISHING		PART NO.		Ver.	A0
				MATERIAL		MOLD NO.	RCWS-10N5U	Q'ty	1
				APPROVED		TITLE	RCWS-10N5U		
TOL	< 30 : ±0.1 30 < 120 : ±0.15 120 < 315 : ±0.2 315 < : ±0.25 ANGLE TOL : ±0.5°	UNIT : mm		CHECKED					
		3RD ANGLE'S		DESIGNED	Martin	DRAWING NO.	RCWS-10N5U		△
				DATE	19-Apr-23	SIZE A3	SCALE 0.25	SHEET: 1 OF 1	